NOTES:

1. MINIMUM 12 GA. INTERNAL REINFORCEMENT REQUIRED BEHIND ALL KEYSLOTS.
2. STRIKE JAMB MUST NOT EXTEND ABOVE DOOR TOP.
3. ESI MUST BE NOTIFIED IF DOOR OPENING HEIGHT IS OTHER THAN 84.00 INCHES.
4. EMERGENCY KEYWAYS TO BE A Ø.438 THROUGH HOLE LOCATED AS SHOWN. IF DOOR HEIGHT CHANGES FROM A 84.50 INCH PANEL, CHANGE THE "S" DIMENSION THE SAME AMOUNT.
5. THE HOISTWAY HEADER TO BE SUPPLIED BY THE ENTRANCE MANUFACTURER.
6. IF "M" DIMENSION IS LESS THAN 2.5 INCHES CONTACT ESI.

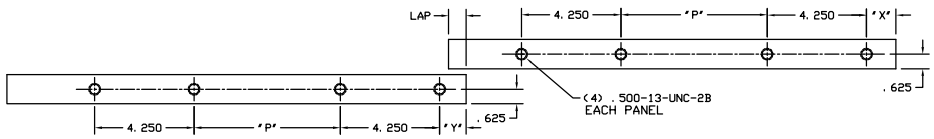

ENLARGED TOP VIEW OF DOORS

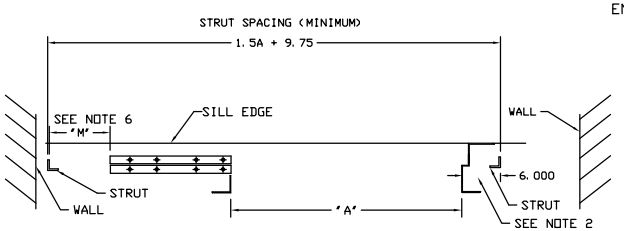

TOP VIEW - DOORS OPEN

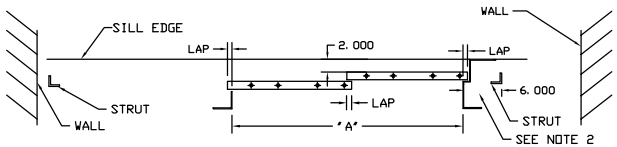

TOP VIEW - DOORS CLOSED

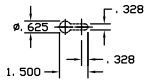

DETAIL A

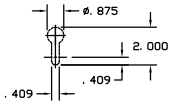

DETAIL B

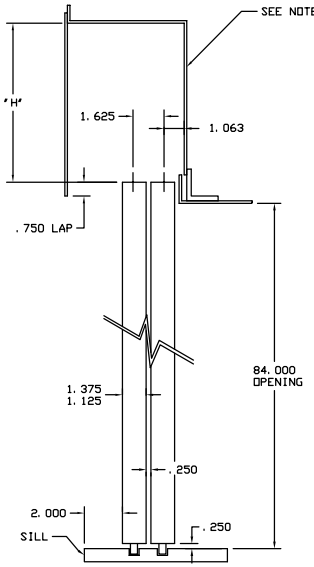

ENLARGED SIDE VIEW

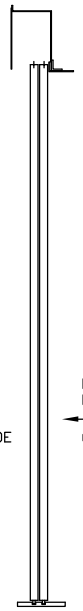

CAR SIDE

ORIENTATION OF VIEW

CORRIDOR SIDE

****
RIGHT HAND SHOWN
LEFT HAND OPPOSITE
****

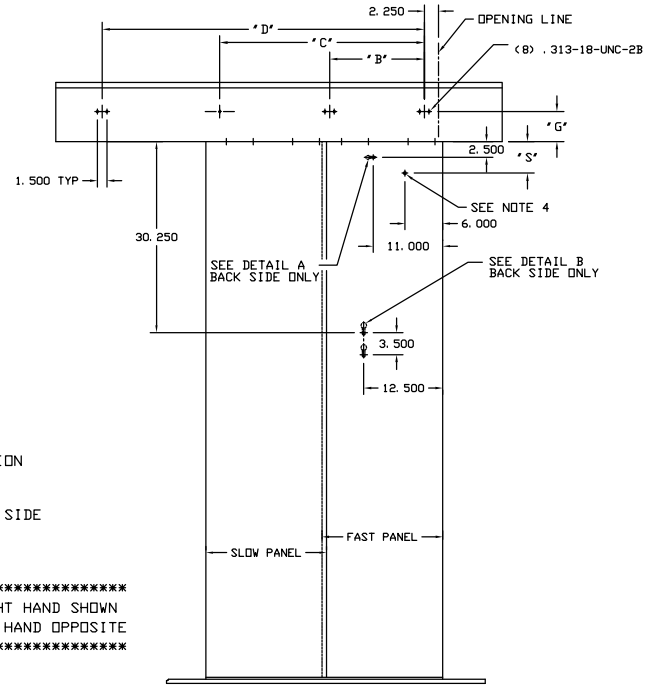

ELEVATION VIEW CORRIDOR SIDE
KEYSLOTS SHOWN (ON BACK OF DOOR)

HANGER POCKET	STANDARD DUTY	HEAVY DUTY
G	4.75	5.50
H	8.75	10.50

LAP	X	Y	DOOR PANEL WIDTH
.50	1.00	1.00	.5A + 1.5(LAP)
.75	1.25	1.12	

"A" =OPENING WIDTH _____
"B" =(A/2)-3 _____
"C" =A-3.625 _____
"D" =1.5A-3 _____
"P" =(A/2)-11.75 _____

JOB NO.	
JOB NAME	
LOCATION	
CUSTOMER	
CUST. NO.	

DATE	QTY	ISSUED TO

OPENING	DOOR HEIGHT	"S"
84.00	84.50 ±.06	3.50
96.00	96.50 ±.06	15.50
108.00	108.50 ±.06	27.50
120.00	120.50 ±.06	39.50

INCH DIMENSIONS

TOLERANCE UNLESS SHOWN

SOURCE/SPEC#/FINISH/WT

THIS INFORMATION IS CONFIDENTIAL AND REMAINS THE PROPERTY OF ELEVATOR SOLUTIONS INTERNATIONAL INC. ITS USE, REPRODUCTION, OR DISSEMINATION WITHOUT THE EXPRESS PERMISSION OF ESI, IS STRICTLY PROHIBITED.

PLOT SCALE: = 9.00

REV	DATE	CH'K	DESCR

DRAWN BY LJP DATE 07/07/04

ELEVATOR SOLUTIONS INTERNATIONAL INC.
ARKANSAS CITY, KANSAS

NAME
ES-1 & 3
TWO SPEED
HATCH DATA

ESIBORDERB R0, 07-04 B

H-2100a